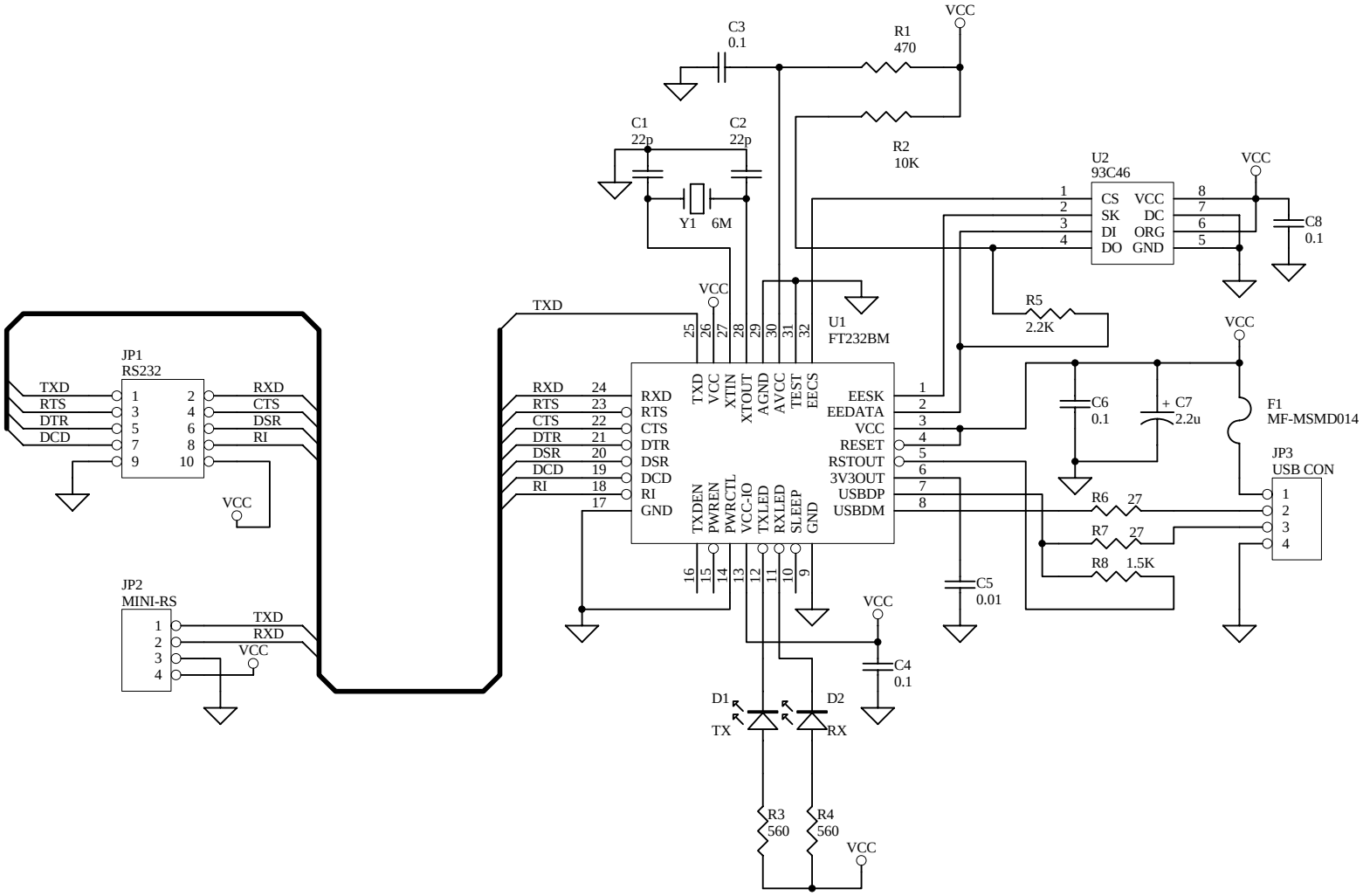

Title **USB232BP**			*INternational Parts & INformation Co.,Ltd.*
Size: A4	Number:	Revision: A	*Matsusiro 3-19-4*
Date: 15-Apr-2004 Time: 11:50:10		Sheet1 of 1	*Tsukuba City*
File: C:\Program Files\Design Explorer 99 SE\D2003\IPI\IPI.ddb - IPIDesign\USB232.Sch			*Ibaraki Pref.*
			Japan 305-0035